Advanced ImmunoChemical Inc.
Providing for the Advancement of Medical Science

ASSAY NOTES
Product Information

Courtesy of HyTest, Ltd

cardiac Troponin T (cTnT)

The cardiac isoform of TnT is, similarly to cTnI, widely used as a marker of myocar- dial cell injury. cTnT has the same release kinetics into the blood-stream and the same sensitivity for minor myocardial injury as cTnI. In the blood of acute myocardial infarction (AMI) patients, cTnT is often found in a free form where as cTnI is mostly found in complex with TnC.

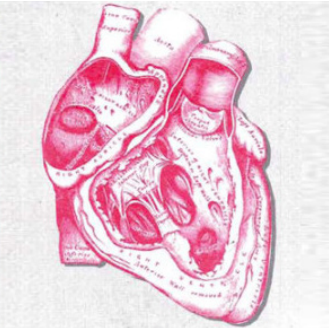

In human beings, cardiac troponin T is encoded by the TNNT2 gene. The major isoform found in normal adult human heart tissue (isoform 6 or TnT3) is 287 amino acids long with a calculated molecular weight of 34.6 kDa.

CLINICAL UTILITY

- **Early marker of acute myocardial infarction**

Reagents for hsCRP assay development

We provide MAbs that are suitable for the development of immunoassays for diagnostic purposes as well as several MAbs that are recommended for research use (see Figure 1). We also provide polyclonal anti-cTnT antibodies as well as purified native and recombinant human cTnT and recombinant human slow and fast skeletal TnT proteins. The skeletal proteins are ideal for studying immunoassay cross-reactivity to these isoforms.

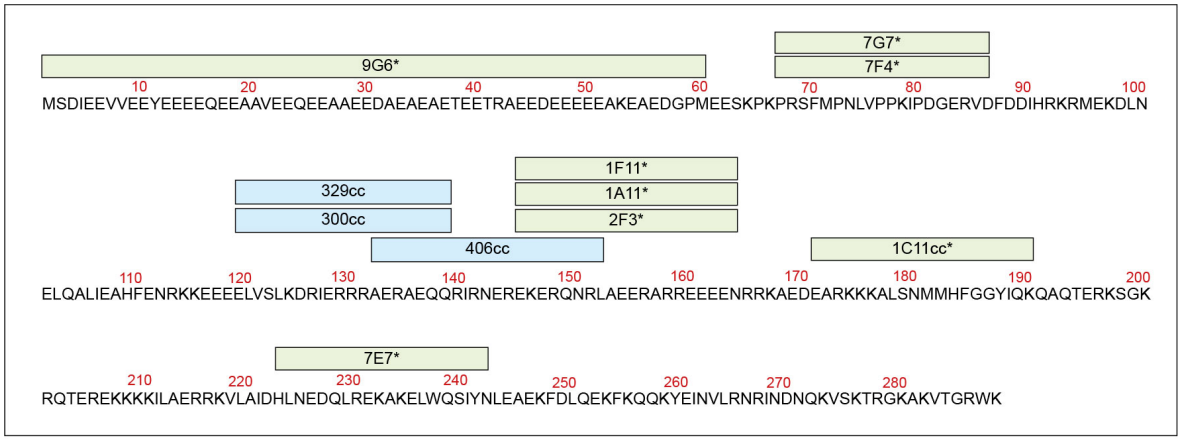

Figure 1. Epitope mapping of anti-cTnT monoclonal antibodies. *We offer antibodies for the development of high-sensitivity cTnT assays (blue) as well as for research purposes (green, marked with *).*

Monoclonal antibodies for high-sensitivity cTnT assays

Our in vitro produced anti-cTnT MAbs (Cat #2-Ttc-h) can be used for the development of an immunoassay with superior sensitivity (limit of detection better than 0.3 ng/l) and high specificity (no cross-reaction to cTnI or to skeletal isoforms of TnT up to 30 µg/l).

The ability of the anitbody pairs 329cc-406cc and 406cc-300cc to recognize cTnT in the blood of AMI patients has been studied with over 80 serum and plasma samples. The anibody pairs demonstrate a good correlation with a commercially available hs-cTnT assay. Results of the analysis of 38 serum samples are provided in Figure 2.

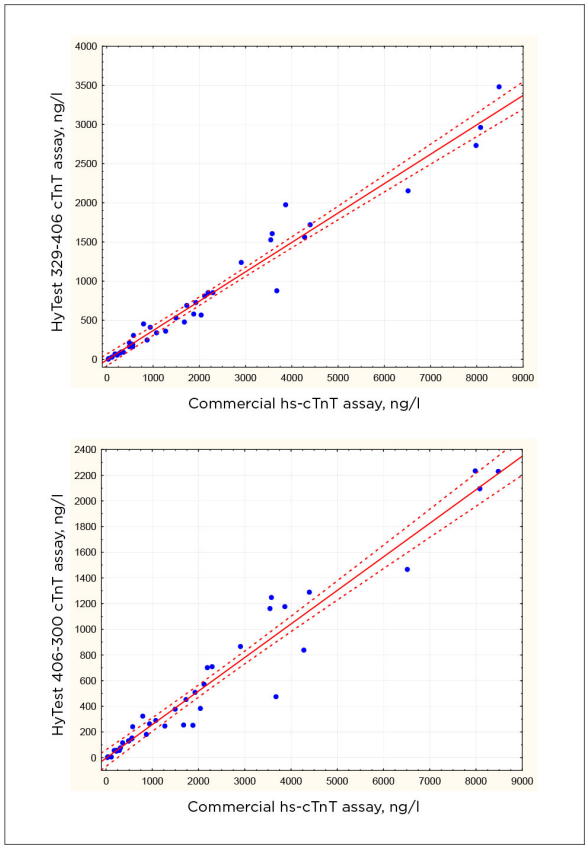

Figure 2. Immunoassays show good correlation to a commercially available hs-cTnT assay. *The concentration of cTnT in 38 serum samples obtained from AMI patients was determined by using two immunoassays that utilized antibodies (capture-detection pairs 329-406 and 406-300) and a commercially available hs- cTnT assay.*

Antibodies for research purposes

We offer several MAbs that are recommended for research purposes, which cross-react with cTnT proteins from different animal species (see Table 1).

MAb	Human	Bovine	Porcine	Goat	Canine	Rabbit	Cat	Rat	Mouse	Fish
7F4	++	N/A	++	N/A	-	-	-	N/A	N/A	-
1F2	+	+	-	+	+	+	+	-	-	+
7G7	+	+	-	-	-	-	-	-	-	-
2F3	++	+	++	++	+	+	+	+	+	+
1A11	++	++	++	++	+	+	+	+	++	+
2G3	++	+	+	+	+	+	+	+	+	-
1F11	++	++	++	++	+	+	+	+	+	+
7A9	+	+	+	+	+	+	-	-	-	-

TABLE 1. Cross-reactivity of anti-cTnT MAbs with antigens from different animal species in Western blotting.

Native human cTnT

Cardiac Troponin T (Cat.#8-TTc-h) is purified from human cardiac muscle tissue by immunoaffinity chromatography followed by an additional ion exchange chromatography step.

Recombinant human cTnT

Isoform 6 (which is also known in the literature as TnT3) is the major isoform of troponin T that is presented in normal adult human heart tissue. Our recombinant human cTnT (Cat.#8-TTc-rh) is produced in E. coli by expressing a gene encoding for the 288 amino acid long isoform 6 (TnT3) of cTnT. This isoform is the main isoform of cTnT in normal adult human heart tissue. The protein has an additional Met residue at its N-terminus.

Recombinant human slow and fast skTnT

The recombinant slow skeletal TnT (Cat.#8-RFTTs) and fast skeletal TnT (Cat.#8-RFTTs-2) are ideal for studying immunoassay cross-reactivity to these isoforms.

Ordering Information:

MONOCLONAL ANTIBODIES

Product Name	Cat #	MAb	Subclass	Remarks
Troponin T cardiac	2-Ttc-h	9G6	IgG1	EIA, WB, a.a.r. 1-60
		7F4	1gG2b	EIA, WB, a.a.r. 67-86
		7G7	IgG1	EIA, WB, a.a.r. 67-86
		2F3	1gG2b	EIA, WB, a.a.r. 145-164
		1A11	1gG2b	EIA, WB, a.a.r. 145-164
		1F11	1gG2b	EIA, WB, a.a.r. 145-164
		1C11	IgG1	EIA, WB, a.a.r. 171-190
		7E7	IgG1	EIA, WB, a.a.r. 223-242
Troponin T cardiac, *in vitro*	2-Ttc-iv	1C11cc	IgG1	EIA, WB, a.a.r. 171-190
		300cc	IgG1	EIA, a.a.r. 119-138
		329cc	IgG1	EIA, a.a.r. 119-138
		406cc	1gG2b	EIA, a.a.r. 132-152

POLYCLONAL ANTIBODIES

Product Name	Cat #	Host Animal	Remarks
Troponin T cardiac	6-cTnT	goat	EIA, WB, IHC, IP

HUMAN ANTIGENS

Product Name	Cat. #	Purity	Source
Troponin T cardiac, human	8-TTc-h	>98%	Human cardiac muscle
Troponin T cardiac, human, recombinant	8-TTc-rh	>95%	Recombinant
Troponin T skeletal muscle, human	8-TTs-h	>95%	Human skeletal muscle
Troponin T fast skeletal, human, recombinant	8-RFTTs-2	>95%	Recombinant
Troponin T slow skeletal, human, recombinant	8-RSTTs	>95%	Recombinant
Troponin complex (I-T-C), human	8-TITC-h	N/A	Human cardiac muscle
Troponin complex (I-T-C), artificial	8-TITC-a	N/A	Human cardiac muscle

ANIMAL ANTIGENS

Product Name	Cat. #	Purity	Source
Troponin T cardiac, bovine	8-TTc-b	>98%	Bovine cardiac muscle
Troponin T cardiac, canine	8-TTc-c	>98%	Canine cardiac muscle
Troponin T cardiac, mouse	8-TTc-m	>98%	Mouse cardiac muscle
Troponin T cardiac, porcine	8-TTc-p	>98%	Porcine cardiac muscle
Troponin T cardiac, rabbit	8-TTc-rb	>98%	Rabbit cardiac muscle
Troponin T cardiac, rat	8-TTc-r	>98%	Rat cardiac muscle
Troponin T skeletal muscle, bovine	8-TTs-b	>95%	Bovine skeletal muscle
Troponin T skeletal muscle, canine	8-TTs-c	>95%	Canine skeletal muscle
Troponin T skeletal muscle, mouse	8-TTs-m	>95%	Mouse skeletal muscle
Troponin T skeletal muscle, porcine	8-TTs-p	>95%	Porcine skeletal muscle
Troponin T skeletal muscle, rabbit	8-TTs-rb	>95%	Rabbit skeletal muscle
Troponin T skeletal muscle, rat	8-TTs-r	>95%	Rat skeletal muscle

Advanced ImmunoChemical, Incorporated | advimmuno.com
562-434-4676 | tech@advimmuno.com | order@advimmuno.com
111 West Ocean Blvd, Landmark Square, 4th Floor, Long Beach, CA 90802